Comelit GROUP S.P.A.
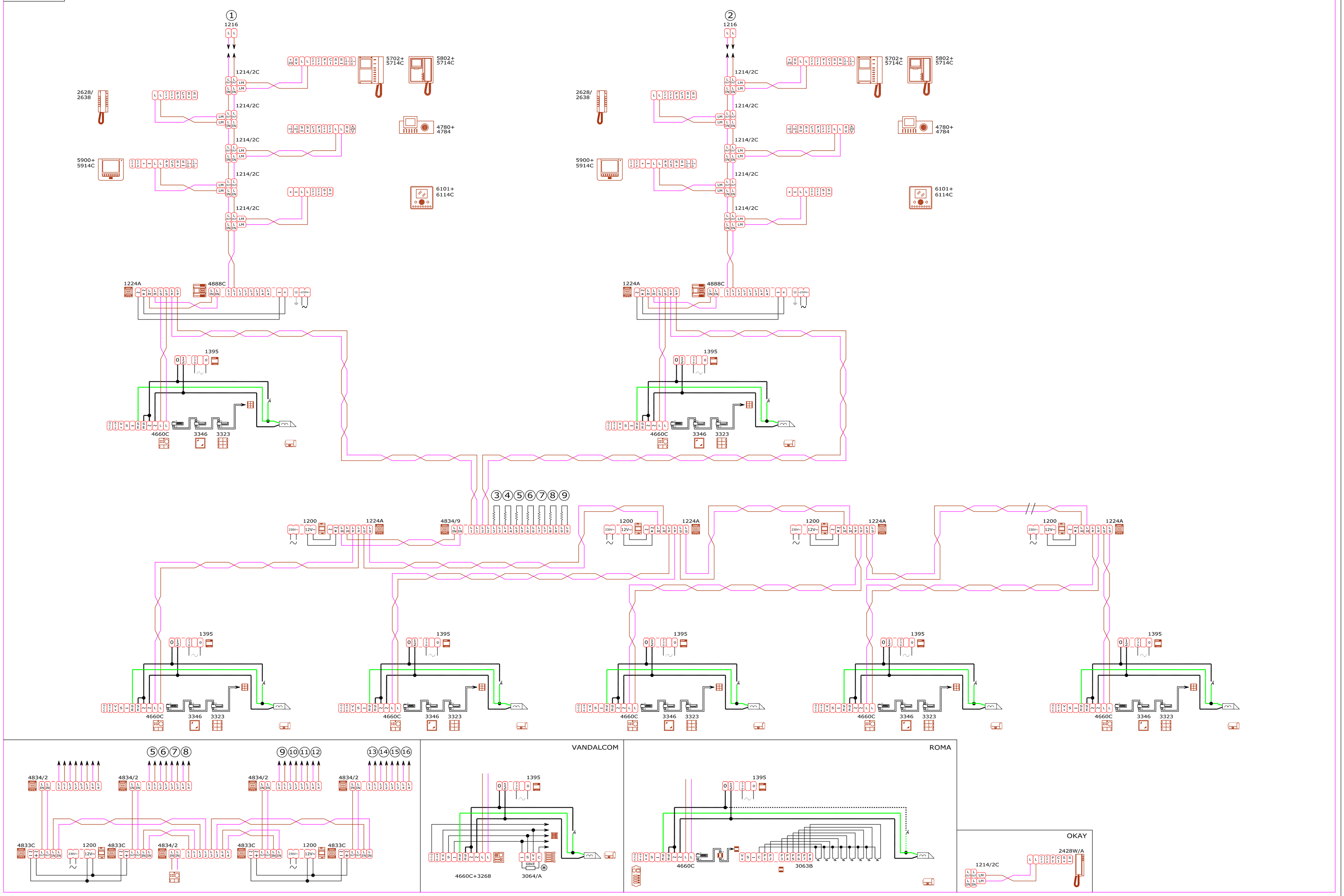
SB2V/EN/185PX